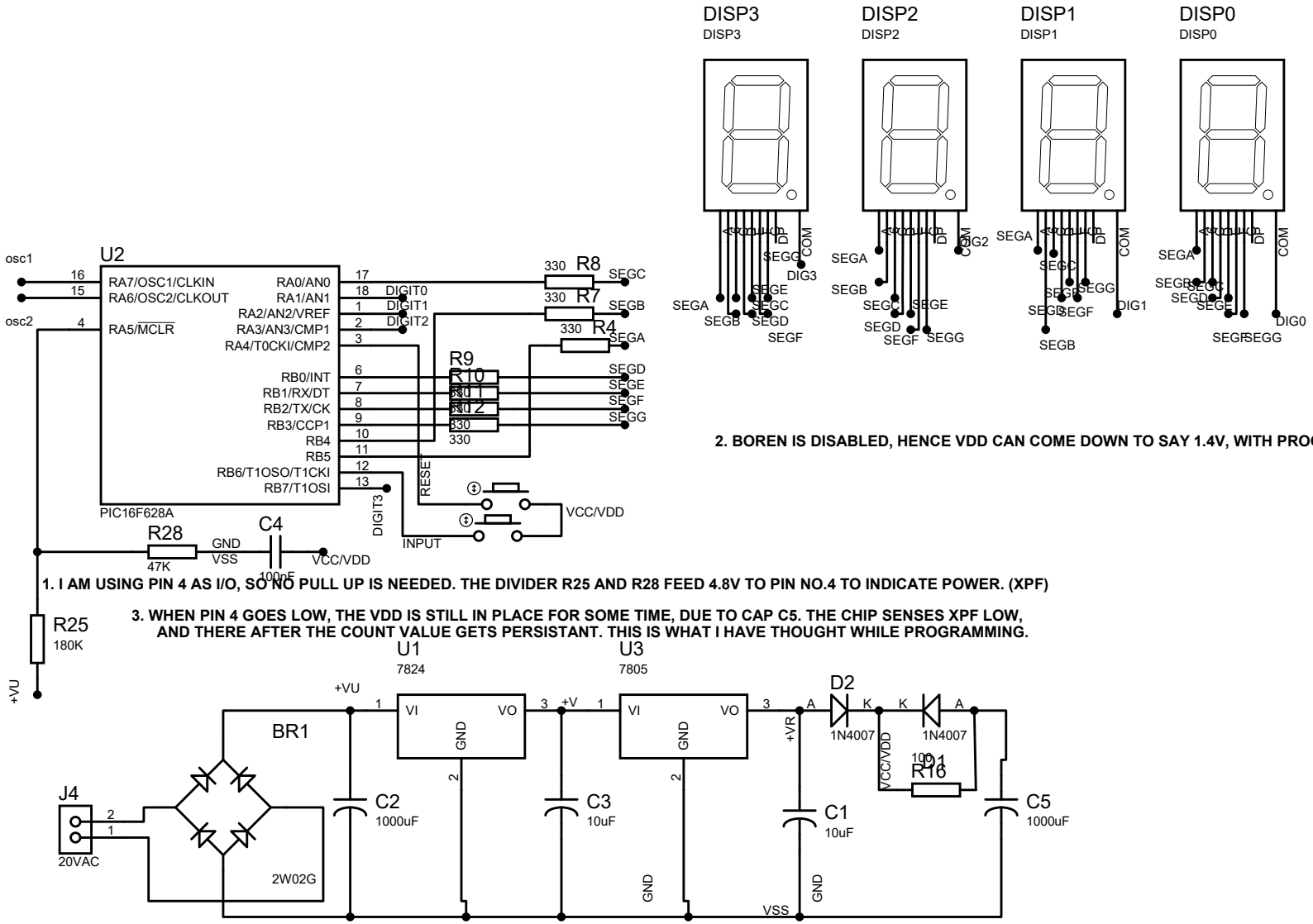

2. BOREN IS DISABLED, HENCE VDD CAN COME DOWN TO SAY 1.4V, WITH PROCESSOR RUNNING.

1. I AM USING PIN 4 AS I/O, SO NO PULL UP IS NEEDED. THE DIVIDER R25 AND R28 FEED 4.8V TO PIN NO.4 TO INDICATE POWER. (XPF)

3. WHEN PIN 4 GOES LOW, THE VDD IS STILL IN PLACE FOR SOME TIME, DUE TO CAP C5. THE CHIP SENSES XPF LOW, AND THERE AFTER THE COUNT VALUE GETS PERSISTANT. THIS IS WHAT I HAVE THOUGHT WHILE PROGRAMMING.